UniFi Mobile Router

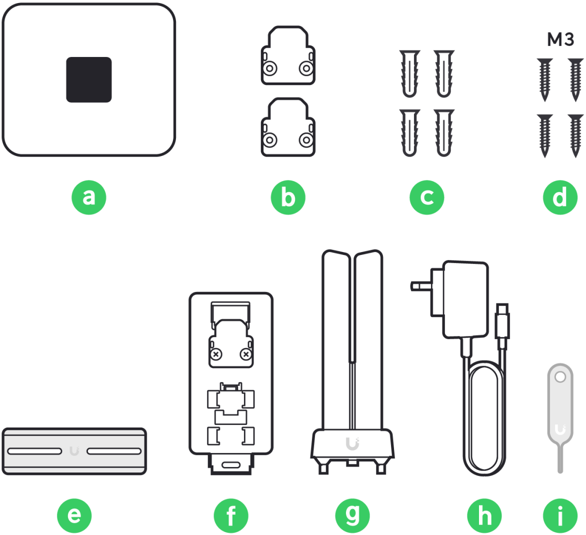

M3
a
b
c
d
e
f
g
h
i

1

A

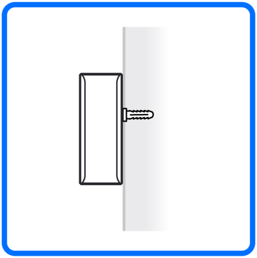

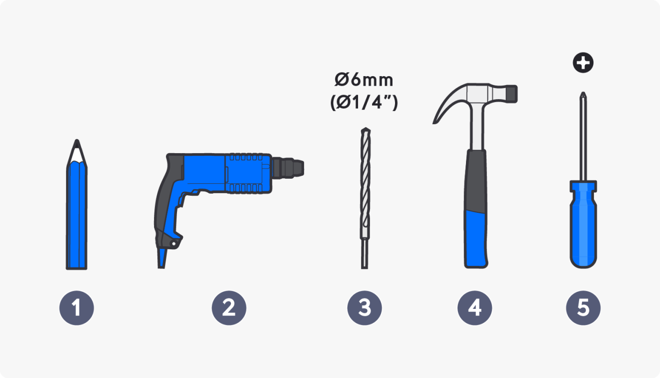
Ø6mm
(Ø1/4")
1
2
3
4
5

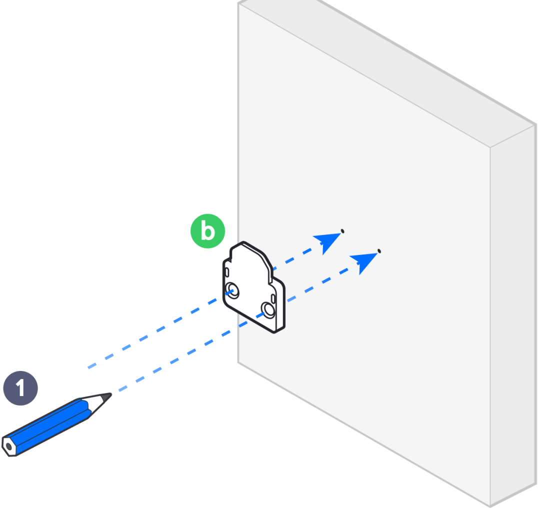

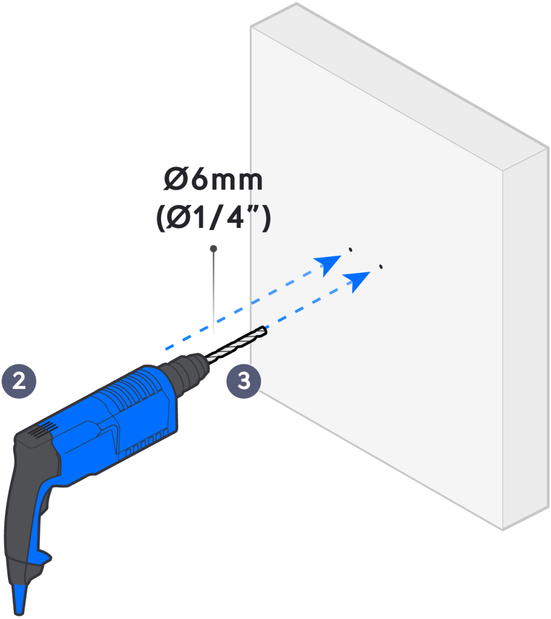

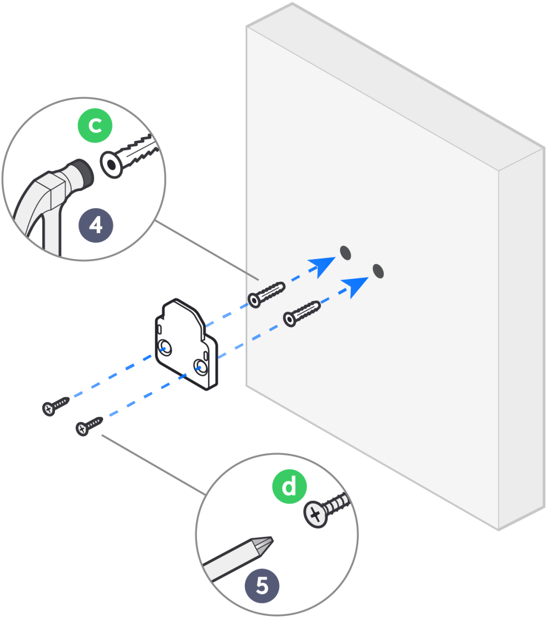

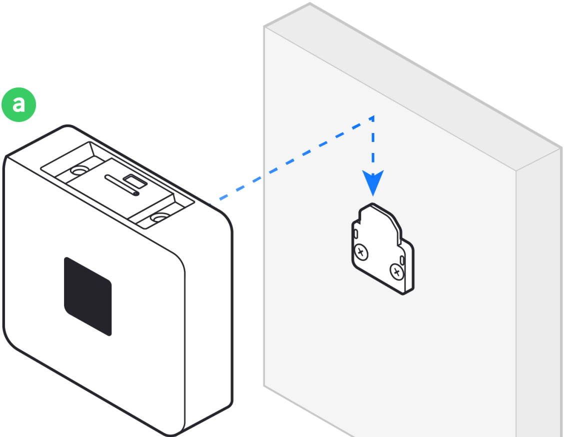

B

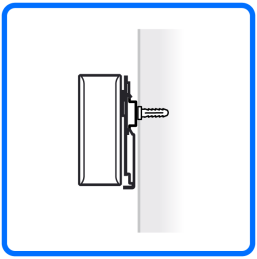

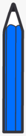

1

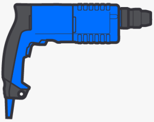

2

Ø6mm
(Ø1/4”)

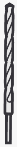

3

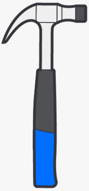

4

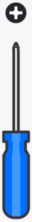

5

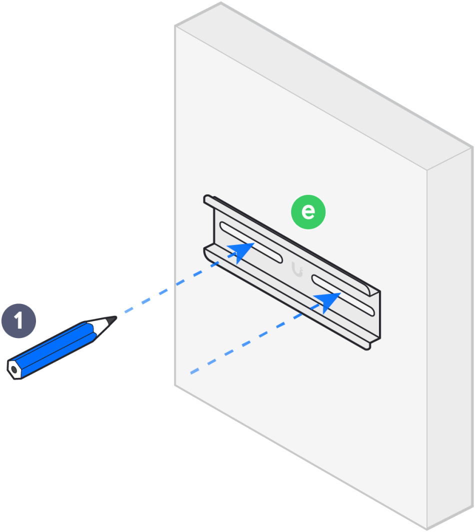

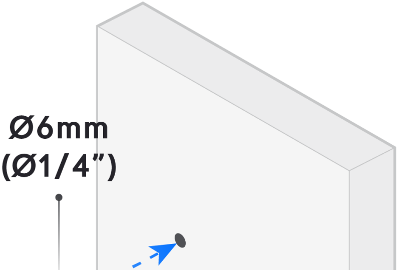

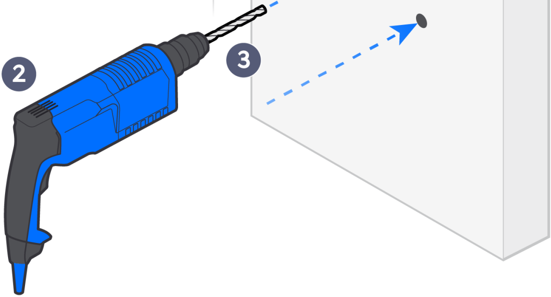

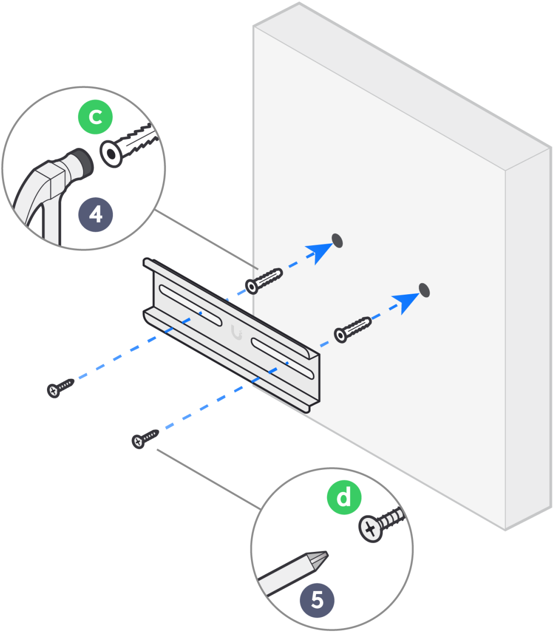

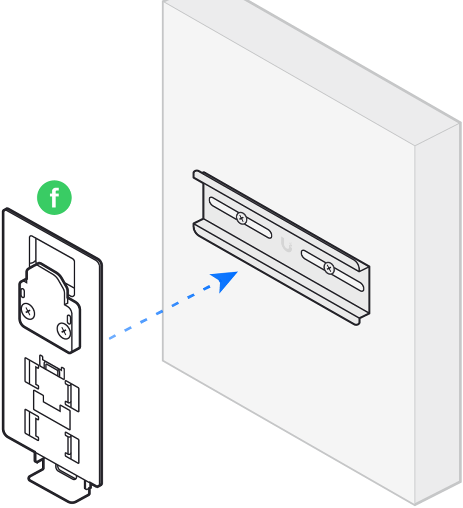

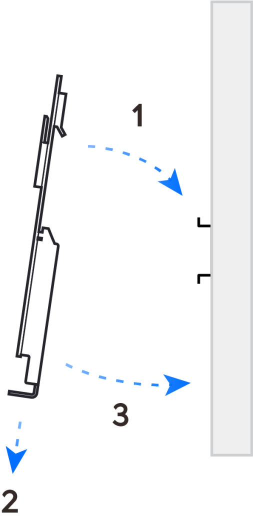

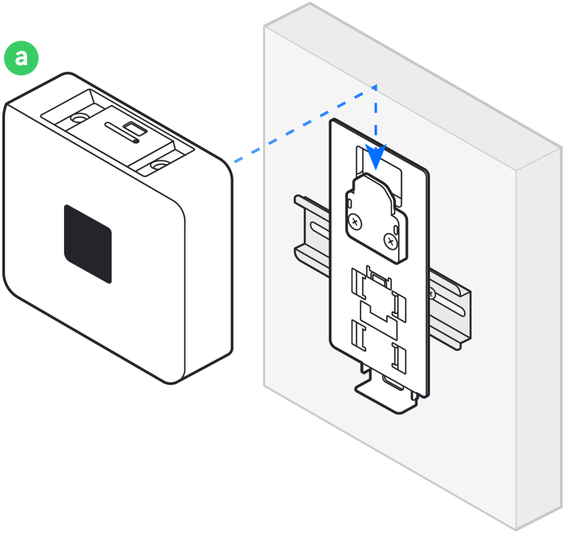

2

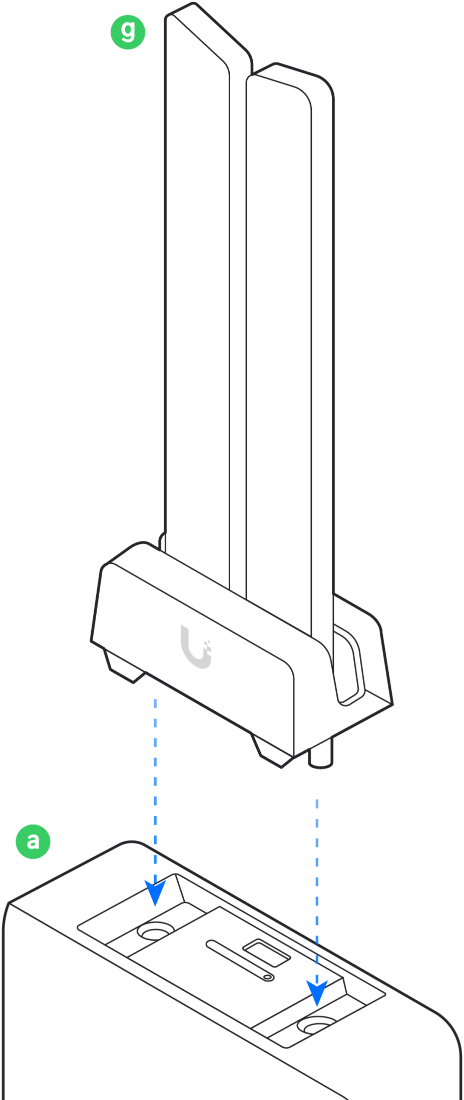

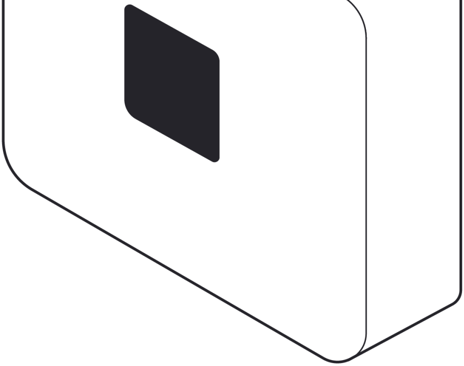

3

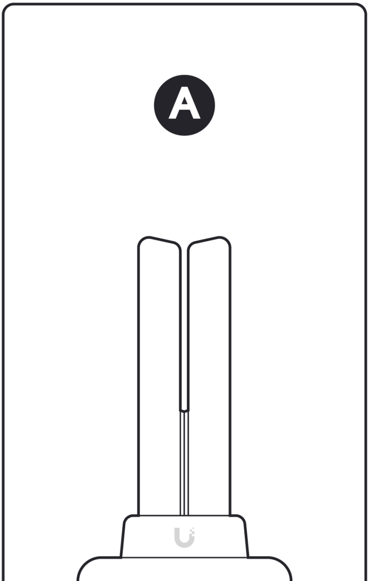

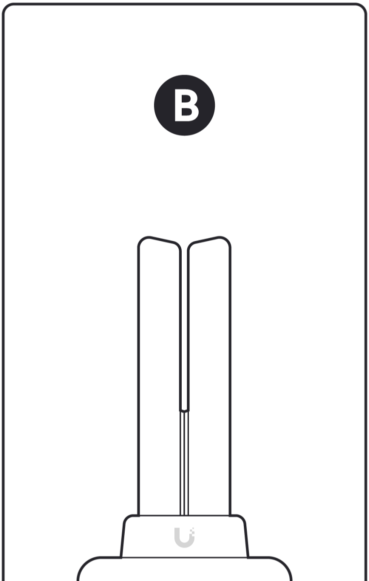

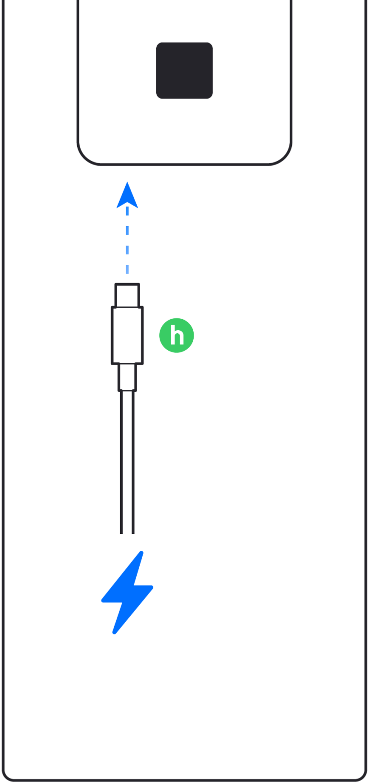

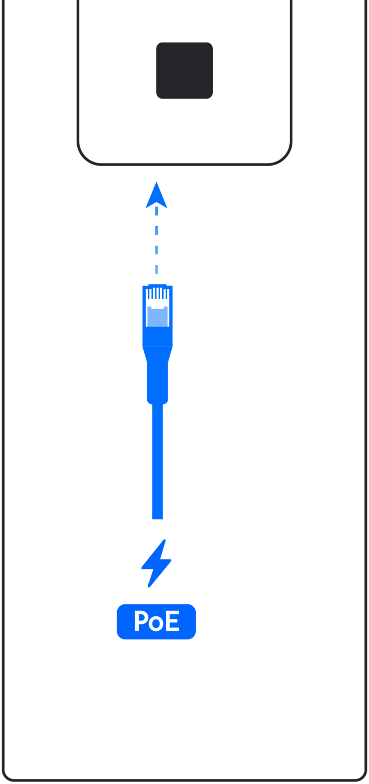

C

D

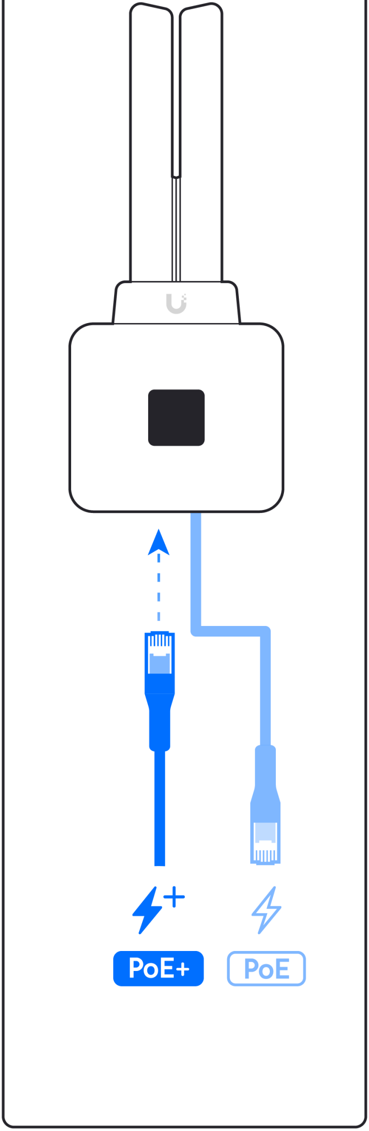

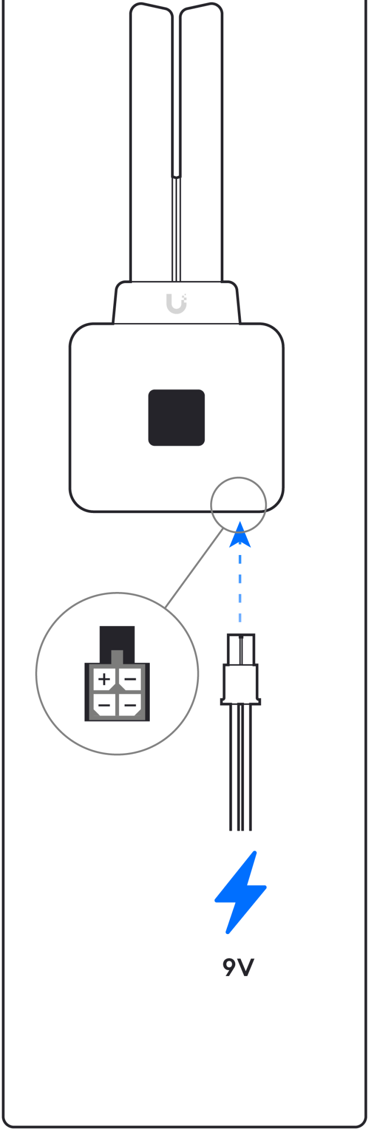

4

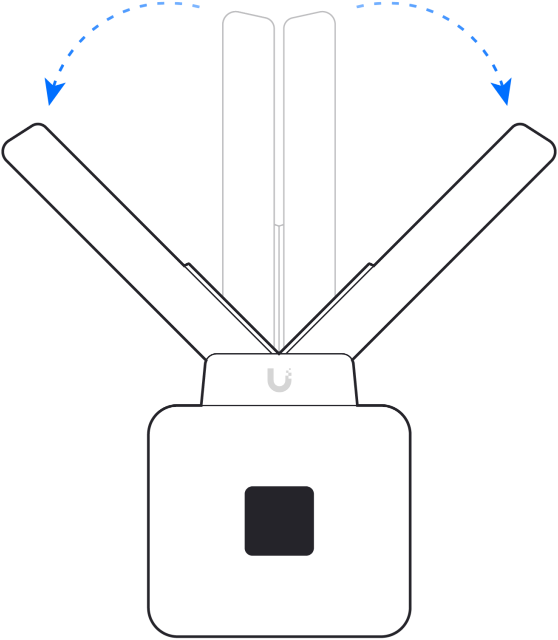

5

A

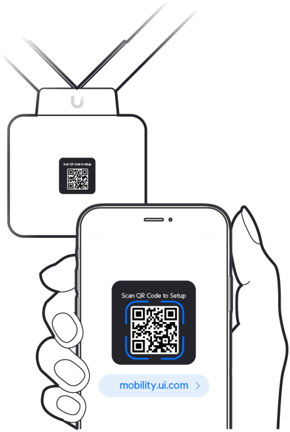
Scan QR Code to Setup
Scan QR Code to Setup
mobility.ui.com

B

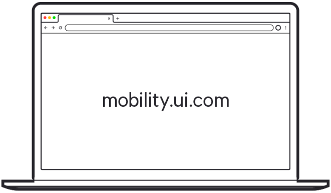
mobility.ui.com

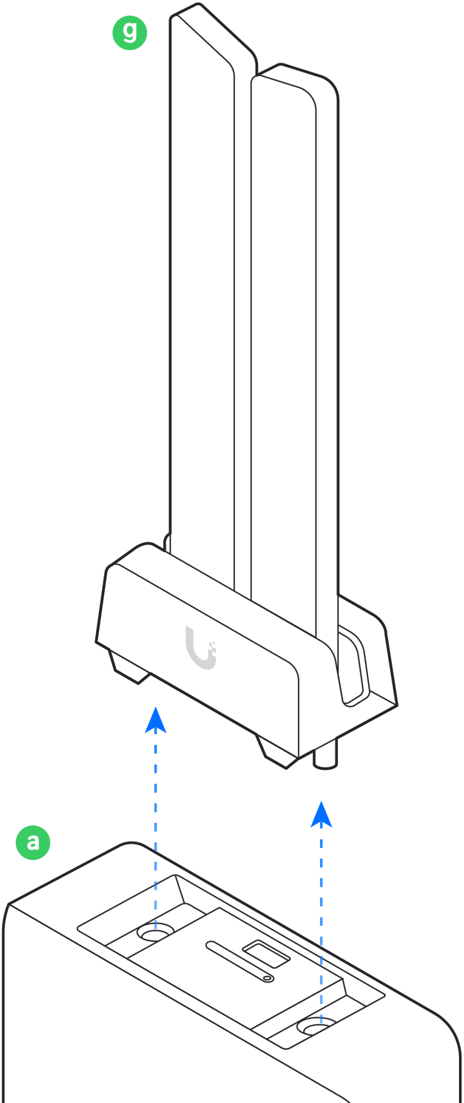

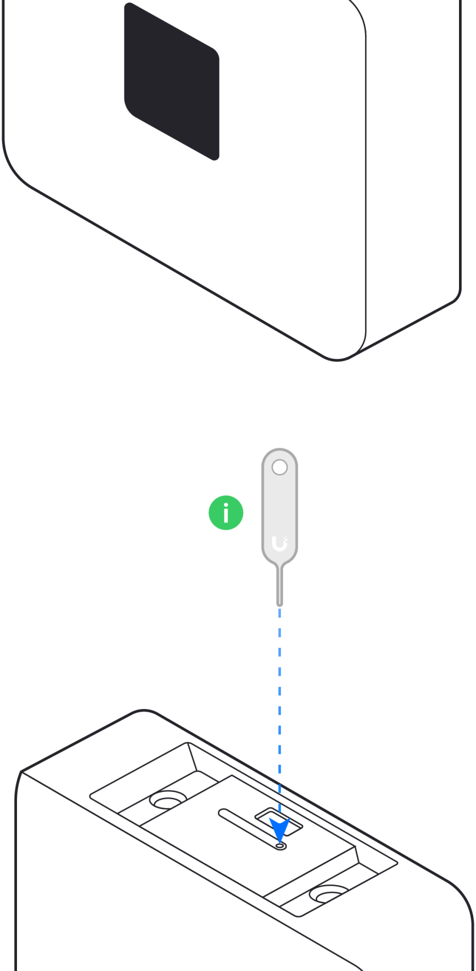

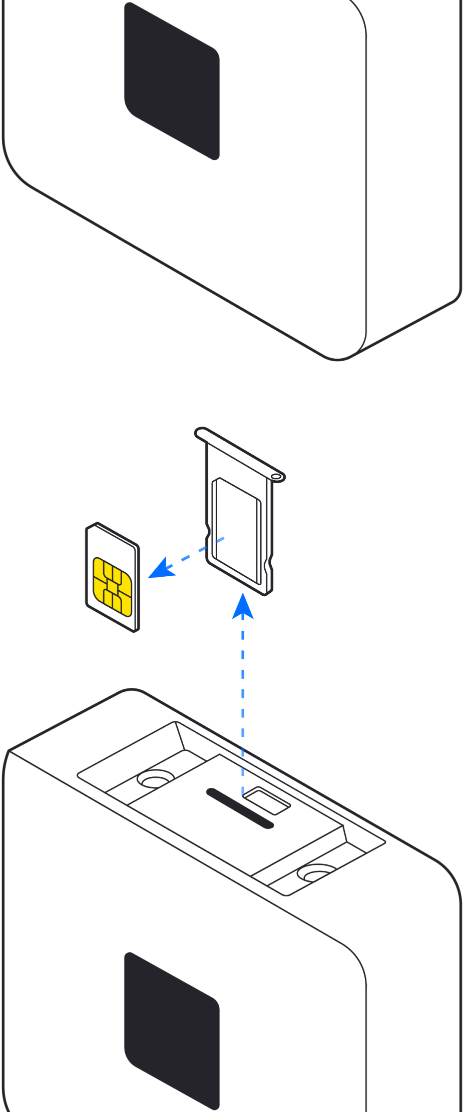

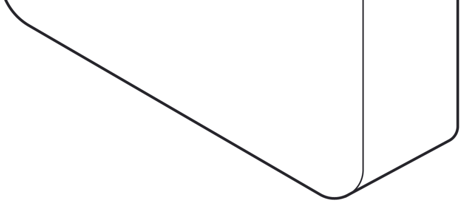

If you need further assistance, visit our Help Center or contact Ubiquiti Support.

©2021 Ubiquiti Inc. All rights reserved. Ubiquiti, Ubiquiti Networks, the Ubiquiti U logo, and UniFi are trademarks or registered trademarks of Ubiquiti Inc. in the United States and in other countries.
All other trademarks are the property of their respective owners.